Department of Engineering and Water Plants
Wastewater Compliance
Fats, Oils and Grease Registration Packet Application
(Must Be Returned within 30 days)

Section A – General Information

FSE (Food Service Establishment) Name: _____

Website (if available): _____

Physical Address: _____

City: _____ State: _____ Zip: _____

Phone: _____ Email: _____

Mailing Address (if different from physical address above): _____

City: _____ State: _____ Zip: _____

FSE Owner or Authorized Applicant: _____

Title: _____

Address: _____

City: _____ State: _____ Zip: _____

Phone: _____ Email: _____

FSE Contact (if different from above): _____

Title: _____

Address: _____

City: _____ State: _____ Zip: _____

Phone: _____ Email: _____

Water and Sewer Account Holder Contact: _____

Water/Sewer Account Number: _____

Title: _____

Address: _____

City: _____ State: _____ Zip: _____

Phone: _____ Email: _____

Section B – Facility Operational Characteristics

1. Please describe the type(s) of food service activities performed at this location:

_____

_____

_____

_____

_____

2. What is the seating capacity of FSE: _____

3. **PROVIDE A COPY OF YOUR MENU WITH THIS APPLICATION.**

4. What are the hours of operation:

SUN	MON	TUE	WED	THR	FRI	SAT

5. Provide a set of plumbing drawings or sketches, including floor plans and riser diagrams, and a site plan showing the location of the sewer discharge(s) and the location of any exterior grease interceptors. Drawings or sketches must have enough sufficient detail to show the location of all kitchen equipment and plumbing fixtures with drains, floor drains, sewer connections, and all grease traps and interceptors.

6. Provide the number and type of grease traps or interceptors below:

_____Interceptor (OUTDOOR) _____Trap (INDOOR) _____NONE

7. Complete the following for each **OUTDOOR** (interceptor) grease trap:

Material (i.e. concrete, fiberglass, etc.):	
Location (parking lot, etc.)	
Capacity of grease removal device (in gallons)	

8a. Complete the following for each **INDOOR** grease trap:

Make and Model	
Location (kitchen, under sink, etc.	
Capacity of grease removal device (in gallons)	

Make and Model	
Location (kitchen, under sink, etc.	
Capacity of grease removal device (in gallons)	

8b. If the **INDOOR** grease trap is being maintained on-site, how do you dispose of the waste after cleaning the trap?

Trash Contractor disposes of grease Recycle

Other; explain: _____

_____

9. If a contractor(s) cleans the INDOOR or OUTDOOR grease removal device(s), please list the following:

Contractor Name: _____

Address: _____

City: _____ State: _____ Zip: _____

Phone: _____ Email: _____

10. Do you use any additives in the plumbing system, grease interceptor, or grease trap (i.e. enzymes, bacteria, etc.?)

Yes No

If **YES** to question 10 above, please complete the following table and attach a MSDS sheet for each product:

Location	Additive Name	Additive Frequency

Department of Engineering and Water Plants
Wastewater Compliance
Fats, Oils and Grease Registration Packet Application

Authorized Representative Statement:

I certify that I have received and read the FOG Ordinance of the City of West Columbia and I understand that all food service establishments must have compliant grease removal devices installed and in proper working order prior to discharging into the City of West Columbia sanitary sewer system.

I further certify that, to the best of my knowledge and belief, this application contains accurate information about my facility and that it was completed under my direction and with my approval. I am aware that providing false information or violating the aforementioned specifications could result in termination of my water and/or sewer service and revocation of my permitted water and/or sewer capacity for this facility.

I also understand that if my water and/or sewer service is terminated or my registration is revoked that I will have to re-pay and/or re-apply for water and sewer service with the City of West Columbia.

Print Name: _____

Title:_____

Signature_____ Date:_____

Return this application (within 30 days)
Andy Zaengle, Director of Engineering and Water Plants
PO BOX 4044 West Columbia, SC 29171-4044

FOR OFFICIAL CITY USE ONLY:

Application complete: _____Yes _____No

Date of pre-permit inspection; _____

Registration to be Approved ( )

Denied ( ) - Explanation for Denial:_____

_____

_____

Date:_____ Application Reviewer: _____

REGISTRATION NUMBER:_____

Grease Trap Operation and Maintenance Program

Note: This form may be used to document maintenance of grease traps both inside and outside of the building. Proper maintenance can help reduce stoppages on private property and in the City's sewage collection system. Completion of this form will serve as documentation for City inspection of maintenance activities.

Company Information: Company Contact: _____

Company Name: _____ Site Address: _____

Date	Maintenance Performed List: Cleaned, Inspected or Pumped	Total Quantity in Gallons Removed	Maintenance Performed By	Signature of Inspector

Article D
Fats, Oils, and Grease (FOG) Management Program

4-3-71 Purpose.

This ordinance will be enforced in conjunction with the City of West Columbia, South Carolina, Code of Ordinances, Title 4, Chapter 3 (hereinafter Chapter 3), and establishes uniform registration, operating, maintenance, cleaning, and inspection requirements designed to limit and control the discharge of fats, oils, and grease from Food Service Establishments (FSEs) into the City's wastewater collection system. The objectives of this ordinance include the following:

(a) To reduce the introduction of excessive amounts of fats, oils, and grease into the City of West Columbia (City) wastewater collection system;

(b) To reduce fats, oils, and grease related build-up to the City's wastewater collection system that could lead to clogging or blocking of the sewer lines, causing backup and flooding of streets, residences, and commercial buildings, resulting in potential property damage and public health threats to the City and its citizens;

(c) To establish uniform identification numbers along with registration procedures and Global Positioning System Coordinates to be input into GIS to identify food service establishments located within the City wastewater service area;

(d) To establish operation, cleaning, and maintenance requirements for food service establishments with grease traps and/or grease interceptors;

(e) To establish inspection procedures and requirements for food service establishments with grease traps and/or grease interceptors;

(f) To establish review procedures and reporting requirements for food service establishments installing new grease traps and/or grease interceptors; and

(g) To establish enforcement procedures for violations of this ordinance.

4-3-72 Definitions.

(a) Director means the City's Director of Planning, Engineering and Water Plants.

(b) Fats, Oils, and Grease (FOG) means any material, either liquid or solid, composed primarily of fats, oils, and grease from animal or vegetable sources.

(c) Food Service Establishment (FSE) means any commercial facility, including, by way of example and without limitation, restaurants, motels, hotels, cafeterias, hospitals, schools, bars, and any other facility which might in the course of its operations discharge kitchen or food preparation wastewater into the City's wastewater collection system or any other customer, other than a residential customer, who otherwise might be likely in its operations to discharge waste streams containing FOG into that system. This definition includes, but is not limited to, any establishment which is required to have a South Carolina

Department of Health and Environmental Control (SCDHEC) food service license and/or permit. All FSEs shall be required to install a Grease Trap or Grease Interceptor.

(d) FSE Owner or Owner means, in the case of an individually owned FSE, the Owner(s) and/or proprietor(s) of the FSE. Where the FSE is a franchise operation, the Owner of the franchisee is the responsible person and/or entity and is considered the FSE Owner. Where the FSE is owned by a corporation, the corporate representative, as designated on the FOG Registration form, is deemed to be authorized to act on behalf of the corporation. Where two or more FSEs share a common Grease Interceptor, the FSE Owner is each individual and/or entity who in whole or in part owns and/or assumes, maintains, or exercises control of the Grease Interceptor or the property on which the Grease Interceptor is located, as well as any individual and/or entity who utilizes or will utilize the shared Grease Interceptor.

(e) Gray Water means all of the liquid contained in a Grease Trap or Grease Interceptor that lies below the floating grease layer and above the bottom solids layer.

(f) Grease means a material, either liquid or solid, composed primarily of fats, oils, and grease from animal or vegetable sources. The terms "FOG," "oil and grease," and "oil and grease substances" shall all be included within this definition and these terms may be used interchangeably.

(g) Grease Hauler means a person or entity that collects the contents of Grease Traps and/or Grease Interceptors and transports the contents to an approved recycling or disposal facility. A Grease Hauler may also provide other services to FSEs related to Grease Trap and/or Grease Interceptor cleaning and maintenance.

(h) Grease Interceptor means a large underground concrete vault located outside of an FSE designed to collect, contain, or remove Grease from the waste stream while allowing the sub-straight or Gray Water to discharge to the wastewater collection system by gravity.

(i) Grease Trap means a device located within an FSE designed to collect, contain, separate, or remove Grease from the waste stream while allowing the Gray Water to discharge to the wastewater collection system by gravity.

(j) Inspector or City Staff means an employee of the City, who under the authority of the Director, has responsibility for implementing and who does implement any FOG management ordinances.

(k) Program means the contents of this ordinance as implemented by the Director, Inspectors, and City Staff.

4-3-73 Grease Traps and Grease Interceptors.

(a) ***Requirements:*** All FSEs located within the City of West Columbia wastewater service area are required to have a Grease Trap and/or Grease Interceptor properly installed and maintained in accordance with the following: this ordinance, Fats, Oils, and Grease

Management, Specifications for Grease Traps and Grease Interceptors and all applicable requirements of the most recent version of the International Plumbing Code.

(b) ***New FSEs:*** FSEs which are proposed or newly constructed, and existing FSEs undergoing a change of use which necessitates the issuance of a new SCDHEC food service permit for expansion, or renovation to provide food services, are considered New FSEs. All New FSEs are required to install Grease Traps and/or Grease Interceptors, as appropriate, in compliance with the *City of West Columbia Grease Trap and Interceptor Sizing Guide (Attachment C)* New FSEs are required to operate, maintain, clean, and repair their Grease Traps and Grease Interceptors according to and in compliance with all applicable provisions contained in this ordinance. In situations where it is not feasible for a New FSE to install an underground Grease Interceptor, the New FSE is required to install adequate and approved Grease Traps for use on individual fixtures, including, but not limited to: pot sinks, mop sinks, pre-rinse sinks, wok ovens, floor drains, and any other drains where the potential for introduction of Grease exists. In such cases, Grease Traps will be considered adequate and will be approved by the City only if a flow control device is placed on the inlet that prevents overloading and a sample port is placed on the outlet of each Grease Trap.

(c) ***Existing FSEs:*** Except as provided in Subsection (d) below, Existing FSEs, which are those FSEs already operating with Grease Traps and/or Grease Interceptors that were installed prior to the effective date of this ordinance, will generally be permitted to operate and maintain existing Grease Traps and Grease Interceptors provided they are in proper operating condition, are determined by the City in its reasonable discretion and given the circumstances and history of the FSE's operations to be sufficiently effective in reducing the levels of FOG discharges into the City's wastewater collection system, and are maintained, cleaned, and repaired in accordance with all applicable provisions contained in this ordinance. In the event of noncompliance with this ordinance and Chapter 3, the City may, in its sole discretion:

(1) Allow modifications to be made by the FSE, at the FSE's own expense, to the existing Grease Trap or Grease Interceptor in order to bring it into compliance; or

(2) Require that the existing FSE install, at its own expense, a new Grease Trap and/or Grease Interceptor that meets the requirements of this and all other applicable laws and regulations.

(d) ***Grease Traps and Grease Interceptors installed prior to the effective date of this ordinance:*** If a Grease Trap or Grease Interceptor installed prior to the effective date of this ordinance does not allow for measurement and sampling to demonstrate that the Grease Trap or Grease Interceptor is in compliance with this ordinance and Chapter 3, the FSE must modify or replace the Grease Trap or Grease Interceptor as provided below no later than December 31, 2018:

(1) The City, in its sole discretion, may approve a proposed modification of an existing Grease Trap or Grease Interceptor provided that in consideration of all relevant engineering and design factors, the City determines that the proposed

modification allows for the effective measurement and sampling of the existing Grease Trap or Grease Interceptor to demonstrate that the Grease Trap or Grease Interceptor is in compliance with this ordinance and Chapter 3. Requests for modifications are considered only as part of the transition to the compliance with the current regulations and are not an ongoing feature of this FOG ordinance. Any proposed modification to meet this requirement must be submitted to the City for review no later than June 30, 2018; or

(2) If not modified pursuant to (a) above, the existing Grease Trap or Grease Interceptor must be replaced with a new Grease Trap or Grease Interceptor, as appropriate, in compliance with the *City of West Columbia Grease Trap and Interceptor Sizing Guide (Attachment C).*

(e) ***Plumbing Connections:*** Grease Traps and Grease Interceptors shall be installed in accordance with the requirements contained in all applicable local plumbing codes. Any Grease Trap and/or Grease Interceptor shall be located in the FSE's lateral sewer line between all fixtures which may introduce Grease into the City's wastewater collection system and that system. Wastewater from domestic facilities and other similar fixtures shall not be introduced into a Grease Trap and/or Grease Interceptor by the FSE under any circumstances.

(f) ***Grease Trap:*** All Grease Traps shall be installed in accordance with the most recent version of the International Plumbing Code. Each FSE shall operate and maintain its Grease Trap in accordance with the following criteria:

(g) ***Sizing:*** All Grease Traps shall be sized in accordance with the *City of West Columbia Grease Trap and Interceptor Sizing Guide (Attachment C).*

(h) ***Flow control device and sample port:*** FSEs are responsible for equipping Grease Traps with a device on the inlet side to control the rate of flow through the Grease Trap. The rate of flow shall not exceed the manufacturer's rated capacity in gallons per minute for each Grease Trap. FSEs are also responsible for equipping Grease Traps with a sample port on the outlet side.

(i) ***Installation, inspection, cleaning, and maintenance:*** Each FSE shall be solely responsible for the cost of Grease Trap installation, inspection, cleaning, and maintenance. Each FSE must either contract with a Grease Hauler cleaning service or develop a written protocol for and perform its own Grease Trap cleaning and maintenance procedures that meet the requirements of this Program. Cleaning shall include the complete removal of all floating materials, Gray Water, and bottom solids from the Grease Trap. The return of Gray Water back into the Grease Trap or into the City's wastewater collection system is prohibited. Grease Trap cleaning must include removing/scraping excess solids from walls, floors, baffles, and inlet and outlet piping. It is the responsibility of each FSE to inspect its Grease Trap during and after the pumping and cleaning procedure to ensure that the Grease Trap is properly cleaned out, that the structure is sound and all fittings and fixtures inside the Grease Trap are in working condition and are functioning properly. The FSE Owner must maintain documentation

consisting of signed and witnessed inspection, cleaning, and maintenance logs on site demonstrating compliance with this ordinance and must be able to produce such documentation immediately upon request of the Inspector and/or City Staff.

(j) ***Grease Trap Cleaning Frequency:*** At minimum, cleaning and maintenance of Grease Traps should be performed in accordance with the Grease Trap manufacturer's recommendations. However, it is the independent responsibility of the FSE to ensure that cleaning and maintenance is performed as often as and in such manner as is necessary to achieve full compliance with Chapter 3 and this ordinance, even if such cleaning and maintenance exceeds that recommended by the manufacturer.

(k) ***Inspection:*** Grease Traps shall be inspected by the Inspector as often as necessary in the City's sole discretion to ensure compliance with Chapter 3, and this ordinance, and to determine if necessary cleaning and maintenance is being performed by the FSE. During any inspection, FSEs are responsible for having qualified personnel on hand to open and close the Grease Trap.

(l) ***Repairs and replacement:*** Each FSE shall be solely responsible for the cost, scheduling, and performance of all repairs and replacements to its Grease Trap(s), including, without limitation, any and all repairs and replacements that may be required by the Inspector and/or City Staff under this Program.

(m) ***Grease Interceptors:*** Grease Interceptors shall be designed and installed in accordance with the *City of West Columbia Grease Trap and Grease Interceptor Sizing Guide* and the most recent version of the International Plumbing Code. In the event of a conflict between the two, the most stringent requirements shall apply. Each FSE shall operate and maintain its Grease Interceptor in accordance with the following criteria:

(n) ***Installation, inspection, cleaning, and maintenance:*** Each FSE shall be solely responsible for the costs of installing, inspecting, pumping, cleaning, and maintaining its Grease Interceptor(s). All FSEs that have Grease Interceptors shall utilize a Grease Hauler to properly dispose of Grease Interceptor contents. Cleaning shall include the complete removal of all Grease Interceptor contents including floating materials, Gray Water, and bottom solids. The return of Gray Water back into the Grease Interceptor or into the City's wastewater collection system is prohibited. Grease Interceptor cleaning must be performed as often and in such manner as is necessary to achieve compliance with Chapter 3 and this ordinance. Such cleaning shall include as necessary removing/scraping and/or hydroscrubbing excessive solids from the walls, floors, baffles and all interior plumbing. It shall be the responsibility of each FSE to inspect its Grease Interceptor during the pumping and cleaning procedure to ensure that the Grease Interceptor is properly cleaned out, that the structure is sound and all fittings and fixtures inside the Grease Interceptor are in working condition and functioning properly. The FSE Owner must maintain documentation on site consisting of signed and witnessed logs documenting inspection, cleaning, and maintenance and demonstrating compliance with this ordinance. The FSE Owner and must be able to produce such documentation immediately upon request of the Inspector and/or City Staff.

(o) ***Grease Interceptor cleaning frequency:*** Each FSE shall have its Grease Interceptor(s) cleaned at a minimum frequency of twice per year. In addition to this required cleaning, each FSE shall determine an additional frequency at which its Grease Interceptor(s) shall be cleaned in accordance and in compliance with each of the following criteria:

(1) When the floatable Grease layer exceeds six inches in depth as measured with an approved dipping method;

(2) When the settleable solids layer exceeds eight inches in depth as measured with an approved dipping method;

(3) When the total volume of captured Grease and solid material displaces more than 25 percent of the capacity of the Grease Interceptor as calculated with an approved dipping method; or

(4) When the Grease Interceptor is not retaining/capturing FOG so as to comply with the requirements of Chapter 3 and this ordinance.

(5) An approved dipping method is a method of sampling the contents of a Grease Interceptor that is approved for the intended use by the Inspector. The Inspector shall maintain a list of approved dipping methods in writing, which shall be available to FSEs upon request.

(p) ***Inspection:*** Grease Interceptors may be inspected by the Inspector as often as necessary in the City's sole discretion to ensure compliance with this Program, including, without limitation, to determine if proper cleaning and maintenance schedules are being adhered to by the FSE. FSEs with Grease Interceptors that are inaccessible to the Inspector are responsible for having personnel readily available during any inspection to provide access to and to open and close the Grease Interceptor for the Inspector. It is the sole responsibility of the FSE to provide the City with access to any inaccessible Grease Interceptor.

(q) ***Repairs and replacement:*** Each FSE shall be responsible for the cost, scheduling, and performance of all repairs and replacements to its Grease Interceptor(s), including, without limitation, any and all repairs and replacements that may be required by the Inspector and/or City Staff under the Program.

(r) ***Additives:*** The introduction of chemicals, enzymes, emulsifiers, live bacteria or other grease cutters or other additives (collectively, "Additives") into the wastewater collection system is prohibited by the City without written approval, in advance, for the specific use proposed. On very rare occasions, the City may, in its sole discretion, approve an FSE's use of Additives. FSEs seeking to introduce Additives must, prior to their introduction into Grease Traps or Grease Interceptors, submit the following information to the Director of Planning, Engineering and Water Plants for review and consideration: Material Safety Data Sheets and any other applicable information concerning the composition, frequency of use, mode of action of the proposed Additive(s), and a written statement outlining the FSE's proposed use of the Additive(s) (the "Parameters"). The FSE may only use the Additives if and when the City grants the FSE permission to do so

in writing and then may only do so in accordance with the specific Parameters proposed by the FSE as approved, with any modifications, by the City. Permission to use any specific Additive may be withdrawn by the City at any time, upon the City providing written notice to the FSE. The City will evaluate the request considering all relevant factors including, without limitations, the risks of failure of such Additives to perform as intended, the maintenance and monitoring requirements associated with approving such an approach, and the City's interest in consistency and uniformity in the administration of these requirements.

(s) ***Alternative Grease Removal Devices or Technologies:*** The use of alternative Grease removal devices and technologies, such as automatic grease removal systems, are generally prohibited by the City. On rare occasions, the City may, in its sole discretion, approve the use of this technology and these devices on a case-by-case basis. The City will evaluate the request considering all relevant factors including, without limitations, the risks of failure of such devices to perform as intended, the maintenance and monitoring requirements associated with approving such an approach, and the City's interest in consistency and uniformity in the administration of these requirements. An FSE may only use alternative Grease removal devices or technologies after receiving permission to do so in writing from the City and then may only do so in accordance with the specific parameters set forth by the City therein. Permission to use any alternative Grease removal devices or technologies may be withdrawn by the City at any time, upon the City providing written notice to the FSE.

(t) ***Recordkeeping:*** Each FSE shall maintain records required hereunder in a bound logbook kept on site at the FSE describing and documenting all cleaning, maintenance, and repairs performed for each Grease Trap and Grease Interceptor including the date and time of each pump out or cleaning and details regarding same; records documenting and detailing any maintenance and/or repairs, and the dates on which such maintenance and/or repairs were performed and completed; and any other records documenting and related to the cleaning, maintenance, and/or repairs for each Grease Trap or Grease Interceptor. All entries must be signed and dated by the individual supervising the work and witnessed by one other person present when the work was done. The logbook must be made immediately available by the FSE for review by the Inspector and/or City Staff upon request during an inspection. In addition to the records specified above, each FSE shall also maintain a file on-site which contains the following information:

(1) A copy of the FSE's FOG Registration form submitted to the City pursuant to Section 4-3-74 below; and

(2) Receipts evidencing and identifying (by name, address, and service(s) provided) any individuals and/or entities performing cleaning, maintenance, and/or repairs on each Grease Trap and/or Grease Interceptor including, without limitation, Grease pumpers, Grease Haulers, plumbers, and parts suppliers.

Failure to maintain complete records in accordance with the Program as specified herein or to provide such records to the Inspector and/or City Staff immediately upon request, or falsification of any record, constitutes a violation of this ordinance. All records required

of an FSE under this ordinance must be maintained for the time period consisting of the two (2) years immediately preceding the date of the most recent inspection of the FSE by the City, and for any time period thereafter.

(u) ***Disposal:*** It is the responsibility of each FSE Owner to ensure that wastes removed from each of its Grease Traps and/or Grease Interceptors are properly disposed of at a facility permitted to receive such wastes.

4-3-74 Fog Registration and New Grease Trap/Grease Interceptor Construction Inspection Procedure.

(a) ***Registration Requirements for FSEs:*** Each FSE shall be subject to the FOG Registration requirements in this Section. This FOG Registration is required in addition to any other permits, registrations, or business license(s) which may be required of the FSE by federal, state, or local law or regulation.

(b) ***Registration Form:*** The City shall provide or make available a FOG Registration form for all FSEs located within the City's wastewater service area. All Existing FSEs are required to submit a completed FOG Registration to the City at the address shown on the form no later than thirty (30) calendar days after receiving notification by the City that registration is required. Failure to do so will constitute a violation of this ordinance. New FSEs are required to submit a completed FOG Registration to the City at the address shown on the form prior to beginning construction. Each FOG Registration form submitted shall include the following information:

(1) FSE Owner's name, title, and contact information; FSE contact name, title, and contact information, if different from the FSE Owner; FSE water and sewer account holder contact information; name of FSE; physical address of FSE; telephone number of FSE; and business mailing address of FSE if different from physical address;

(2) A description of the type of food service activities to be performed at the FSE;

(3) Seating capacity of the FSE;

(4) A copy of calculations demonstrating how the size of each Grease Trap and/or Grease Interceptor was determined; a set of plumbing drawings or sketches, including floor plans and riser diagrams; and a site plan showing the location of the sewer discharge(s) and the location of any exterior Grease Interceptors, where applicable (drawings or sketches must have sufficient enough detail to show the location of all kitchen equipment and plumbing fixtures with drains, floor drains, sewer connections, and all Grease Traps and Grease Interceptors);

(5) For FSEs with Grease Traps, documentation demonstrating that (a) the Grease Trap is equipped with a device on the inlet side to control the rate of flow through the Grease Trap such that the rate of flow does not exceed the manufacturer's rated capacity in gallons per minute for each Grease Trap; and (b) the Grease Trap is equipped with a sample port on the outlet side;

(6) Total hours of operation each day;

(7) Executed statement of the FSE Owner certifying that the FSE Owner has received, read, understands, and agrees to abide by this ordinance, Chapter 3, as well as any other applicable federal, state, and local laws and regulations governing the FSE; that the information provided in the FOG Registration form is accurate; that the FOG Registration form was completed at the FSE Owner's direction and with the FSE Owner's approval; that the FSE Owner understands that providing false information or violating the provisions of the above-stated laws and/or regulations may result in termination of the FSE's water and/or sewer service, and/or revocation of the FSE's permitted water and/or sewer capacity and/or other permits and licenses provided by the City for the FSE's operations; and that if the FSE's water and/or sewer service is terminated, the FSE will have to submit a new FOG Registration form and/or reapply for water and/or sewer service with the City and bear all associated costs; and

(8) All other information regarding the description of the FSE's operations, including, without limitation, information regarding the FSE's Grease Traps and Grease Interceptors, and treatment of same, as identified on the FOG Registration form.

(c) ***FSEs with Shared Grease Interceptor(s)***: In situations where FSEs share one or more Grease Interceptors, the owner of each Grease Interceptor and any FSE and FSE Owner who utilizes or will utilize the shared Grease Interceptor are collectively responsible for completion and submission of the FOG Registration form to the City within the time period required in this ordinance, for identifying all FSEs connected to each Grease Interceptor in the FOG Registration form, and for ensuring that all FSEs connected to that Grease Interceptor comply with this ordinance, as well as Chapter 3. All FSEs connected to the shared Grease Interceptor shall be subject to inspections under this ordinance. In the event the identity of an FSE connected to the shared Grease Interceptor changes or in the event that an additional FSE connects to the shared Grease Interceptor, the owner of the shared Grease Interceptor, the FSE Owner, and any FSE utilizing or who will utilize the shared Grease Interceptor must submit an updated FOG Registration form identifying the change or the additional FSE to the City at least thirty (30) calendar days prior to the change and prior to the additional FSE connecting to the shared Grease Interceptor.

(d) ***New Grease Trap/Grease Interceptor Inspection Procedure.***

(1) *FSE – New Facilities.* After a completed and satisfactory FOG Registration form has been submitted to the City, the FSE may proceed with installation and/or construction of the Grease Trap and/or Grease Interceptor. When installation and/or construction of the Grease Trap and/or Grease Interceptor is completed, the FSE Owner shall notify the City that the FSE is ready for inspection. The FSE Owner shall notify the City prior to covering any exterior Grease Interceptors. During the inspection, the information contained in the FOG Registration form will be verified and the FSE's Grease Traps and/or Grease Interceptors will be inspected. If any Grease Trap or Grease Interceptor requires maintenance or repairs, if any incorrect information has been given, or in the event of

noncompliance with any portion of this ordinance, the Inspector will issue a written notice requiring that the FSE correct any deficiencies, including a required time schedule for repairs to be effected prior to a second inspection. Second inspections will be performed after a minimum of ten (10) calendar days have elapsed to allow the FSE to implement appropriate and necessary corrective action(s) to correct the deficiencies. If the FSE is not in compliance at the second inspection, the FSE Owner must complete any additional maintenance and/or repairs or take whatever other action may be required for compliance, and resubmit the FOG Registration form. Failure to comply with any portion of this ordinance after resubmission of the FOG Registration form may result in enforcement action pursuant to Chapter 3, including, but not limited to, termination or denial of the FSE's water and/or sewer service.

(2) *FSE – Existing Facilities.* All Existing FSEs are required to submit a completed FOG Registration form to the City at the address shown on the form no later than thirty (30) calendar days after receiving notification by the City that registration is required. Failure to do so will constitute a violation of this ordinance. A new FOG Registration form must be submitted upon change in ownership of the FSE or changes in operations, changes in plumbing configurations or additions, if such changes could result in a potential change in the FOG discharge into the City's collection system or could change the functioning or maintenance requirements of the FSE's existing facilities and shall include, without limitation, a change of use which necessitates the issuance of a new SCDHEC food service permit; remodeling or expansion of the food preparation area; and/or modifications to the kitchen waste plumbing system. No new Grease Trap or Grease Interceptor may be placed into service until the City has conducted an inspection pursuant to the procedures set forth in subsection (1) above.

4-3-75 Inspection Procedure.

All FSEs are subject to inspection as follows:

(a) ***Inspections:*** The Inspector and City Staff may inspect FSEs at any time during business hours in order to verify continued compliance with all applicable laws and regulations, including, without limitation, requirements of this ordinance and Chapter 3. All FSEs which have submitted a FOG Registration form should expect to be inspected on a regular basis. Inspections shall include, without limitation, all equipment, food processing and storage areas that discharge into the Grease Traps and/or Grease Interceptors at the FSE. The Inspector and/or City Staff shall also inspect the FSE's logbook and other records and data required to be kept hereunder; Grease Trap(s) and/or Grease Interceptor(s); and may check the level of the Grease Trap and/or Grease Interceptor contents and take samples and/or photographs as deemed necessary in the Inspector's sole discretion. If noncompliance is identified by the Inspector and/or City Staff during an inspection, the Inspector will, after the inspection, issue the FSE a written notice of violation directing the FSE to correct any deficiency. The FSE will be scheduled for re-inspection at the time denoted in the notice of violation.

(b) ***Re-inspections:*** The Inspector and City Staff will re-inspect FSEs that are issued a notice of violation within the time period specified in the notice of violation. The Inspector shall inspect, without limitation, any repairs made or other corrective measures taken by the FSE with regard to any noted violations and will subsequently provide written notice of compliance or non-compliance to the FSE as the case may be. If, upon re-inspection, the FSE has corrected all of the deficiencies which resulted in the issuance of the notice of violation and the FSE is in full compliance with all other requirements of the Program, the FSE will be notified by the City that it is in compliance.

(c) ***Access and Cooperation During Inspections:*** Upon the request of the Inspector and other duly authorized employees or agents of the City, each FSE shall allow the Inspector and other duly authorized employees or agents of the City, including, without limitation, City Staff, access to all parts of the FSE premises for inspection, observation, records examination, measurement, sampling, testing and for other purposes in accordance with the provisions of this ordinance. The refusal of any FSE to allow the Inspector and/or City Staff entry to or upon the FSE's premises, or an FSE's failure to cooperate in any manner during the course of an inspection, shall constitute an immediate violation of this ordinance, which may result in an immediate enforcement action pursuant to this ordinance without further notice.

(d) ***Non-Compliance:*** In the event of continuing non-compliance after re- inspection, the FSE Owner will be notified that continued failure to comply within the time period designated by the City may result in enforcement action pursuant to Chapter 3, including, but not limited to, termination of water and/or sewer service.

4-3-76 Violations.

(a) ***Notices of Violation:*** Deficiencies that will result in a finding of noncompliance and issuance of a notice of violation under this Program include the following:

(1) Failure of the FSE to allow the Inspector or City Staff access to all parts of the FSE premises for inspection, observation, records examination, measurement, sampling, testing and for other purposes in accordance with the provisions of this ordinance shall constitute an immediate violation, as stated above;

(2) Failure of the FSE to properly operate, maintain, clean, and/or repair a Grease Interceptor and/or Grease Trap in accordance with this ordinance;

(3) Failure of the FSE to report changes in operations or plumbing changes or additions, as indicated above, which could affect the operations or loading of the Grease Trap or Grease Interceptor and including, without limitation, a change of use which necessitates the issuance of a new SCDHEC food service permit; remodeling or expansion of the food preparation area; and/or modifications to the kitchen waste plumbing system;

(4) Where the FSE is operating an irreparable, non-functioning or defective Grease Trap and/or Grease Interceptor that is in need of replacement;

(5) Failure by the FSE or successor owner to report a sale or change in ownership of the FSE by submitting a new FOG Registration form within the thirty (30) days and in accordance with the procedures set forth in this ordinance;

(6) Failure of the FSE to have or maintain plumbing connections to a Grease Trap or Grease Interceptor in compliance with the requirements of this ordinance;

(7) Failure of the FSE to submit a completed FOG Registration within thirty (30) days after the date of notification by the City that such an application is required to be submitted;

(8) Failure of the FSE to promptly report to the City that it is contributing FOG to the City's wastewater collection system in quantities in excess of the allowable limits as established in Chapter 3;

(9) Failure of the FSE to maintain and/or retain, or to produce upon the Inspector or City Staff's request, records as required under this ordinance for the time period delineated in this Program;

(10) Failure of the FSE Owner to maintain a Grease management program in place;

(11) Failure of the FSE Owner and/or any user of a shared Grease Interceptor to identify to the City all FSEs connected to the shared Grease Interceptor in the FOG Registration form in accordance with the requirements of this ordinance;

(12) Failure by an FSE which previously received a notice of violation under this Program to achieve compliance upon re-inspection;

(13) Bad-faith failure or refusal to comply with a notice of violation issued under this Program by an FTE or failure to otherwise cooperate with the Inspector and/or City Staff as required by this ordinance as determined by the Inspector of City Staff; and

(14) Any other failure to comply or noncompliance with the Program, this ordinance, or Chapter 3.

(b) ***Schedules of Compliance:*** Failure to comply with this ordinance may result in the following notices of violation with the compliance schedules noted. However, nothing in this Section precludes the City from taking immediate enforcement against an FSE in violation of this ordinance or Chapter 3 where such action is indicated in light of the reckless or willful nature of the violation.

(1) A notice of violation may be issued to the FSE by the City with the following compliance schedule in situations where an Inspector determines:

a. that the FSE's Grease Trap and/or Grease Interceptor is irreparable or defective and must be replaced;

b. that an FSE has no Grease management in place;

c. that the FSE has undergone a change of use which necessitates the issuance of a new SCDHEC food service license and/or permit, remodeling, expansion of the food preparation area, or modifications to the kitchen waste plumbing system and has failed to comply with the requirements of this ordinance;

d. that the FSE does not have or does not properly maintain plumbing connections to a Grease Trap or Grease Interceptor in compliance with this ordinance.

FSEs receiving a notice of violation for any deficiency identified above will be required, within fifteen (15) days of the date of the notice of violation, to submit a corrective action plan to the City for consideration, outlining and detailing the scope of work, including a timeline for completion, that meets the requirements set forth in this Program, and Chapter 3. If the City approves the corrective action plan, the FSE must construct the improvements at its own expense. Construction must be complete within forty-five (45) days of the date of the City's written approval of the corrective action plan. A pre-construction inspection will be scheduled by the City, and the FSE is responsible for notifying the City at least twenty-four (24) hours in advance of the start of construction in order for this inspection to be scheduled.

(2) A notice of violation may be issued to the FSE by the City with a fifteen (15) day compliance schedule in situations where an Inspector determines:

a. that the FSE has failed to adequately clean, maintain, repair, or replace a Grease Trap or Grease Interceptor as determined by the City in accordance with this Program;

b. that the FSE is contributing FOG to the City's wastewater collection system in quantities in excess of the allowable limits as established by the City in Chapter 3;

c. that the FSE has been sold or undergoes a change of ownership or in operations and a new FOG Registration form is not submitted by the New FSE Owner in accordance with the requirements of this ordinance;

d. that the FSE has been notified by the City that it must submit a completed FOG Registration form and the FSE has failed to do so within thirty (30) days of the date of notification;

e. that the FSE Owner and/or any user of a shared Grease Interceptor has failed to identify to the City all FSEs connected to the shared Grease Interceptor in the FOG Registration form in accordance with the requirements of this ordinance;

f. that the FSE has failed to produce, maintain, or retain maintenance logs, files, or other records required to be kept under this ordinance for the time period consisting of the two (2) years immediately preceding the date of the most recent inspection at the FSE and any time period thereafter; or

g. that the FSE has otherwise failed to comply with the Program in any other manner set forth in this ordinance.

In such cases the FSE has fifteen (15) days from the date of the issuance of the notice to correct the conditions giving rise to the violation and achieve compliance.

(3) A notice of violation will be issued to the FSE by the City with a seven (7) day compliance schedule in situations where an Inspector determines:

a. that the FSE previously received a notice of violation under this Program and, upon re-inspection, the FSE remained in noncompliance; or

b. that the FSE, in the sole discretion of the City, has engaged in bad-faith failure or has refused to comply with a notice of violation issued under this Program or has failed to otherwise cooperate with the Inspector and/or City Staff as required by this ordinance.

In such cases the FSE has seven (7) days from the date of the issuance of the notice to correct the conditions giving rise to the violation and achieve compliance.

(c) ***Corrective Action:*** Where an FSE receives three (3) notices of violation within a one-year time period under this Program, the FSE will be automatically placed on a corrective action plan by the City that is designed to bring the Grease Trap and/or Grease Interceptor into compliance within the period of time specified in the corrective action plan. An FSE may be placed on a corrective action plan for a single violation or combination of violations when, in the discretion of the City, such violation(s) are recurring or are of a nature or severity which warrants the immediate imposition of a corrective action plan to bring the FSE into compliance with this ordinance.

(d) ***Other Enforcement Action***: Any FSE which violates Chapter 3 or this ordinance shall be subject to such other enforcement action as allowed by and in accordance with Chapter 3 and applicable state law, including, but not limited to:

(1) A civil penalty not to exceed two thousand dollars ($2,000) for each day of violation under the terms of Article F of this Title;

(2) Termination of water or wastewater service pursuant to section 4-3-95;

(3) Immediate revocation of any other permits or licenses granted by the City related to the activities generating the FOG discharge, and

(4) Criminal penalties pursuant to Article F of this title.

4-3-77 General Specifications for Grease Traps and Grease Interceptors.

(a) This section includes guidelines and requirements for design and installation of Grease Traps and Grease Interceptors. Construction details as shown in *Standard Grease Interceptor* and *Standard Grease Interceptor in Series*, attached hereto as *Attachment A* and *Attachment B*, respectively, are part of these specifications.

(b) Grease Traps or Grease Interceptors shall be provided by each FSE for the proper handling of liquid wastes containing significant amounts of fats, oils, and grease as specified in FOG Management Program Requirements. All Grease Traps and Grease Interceptors installed by FSEs must be in compliance with the specifications herein and shall be located so as to be readily and easily accessible for cleaning and inspection. All Grease Traps and Grease Interceptors shall be supplied by and properly cleaned and maintained by the FSE Owner at its own expense in accordance with and as provided in this Article.

(c) All FSEs, new or existing, requesting new or expanded sewer service from the City, shall submit a FOG Registration form in accordance with Part 1 prior to receiving such new or expanded sewer service.

(d) It is the intent of this specification to provide specific standards for the location, design, installation and construction of Grease Traps and Grease Interceptors in accordance with the requirements stated herein. Failure to comply with this specification shall result in the denial or discontinuance of water and/or sewer service.

4-3-78 Design and Construction Requirements.

(a) ***New FSEs***

(1) Non-cooking intensive FSEs, as determined by the City based on the nature of the FSE's operations, may be allowed to utilize Grease Traps. Examples of FSEs which might be determined to be non-cooking intensive FSEs are identified in *City of West Columbia Grease Trap and Grease Interceptor Sizing Guide (Attachment C)*; however, these FSEs are provided by way of example only and for general guidance to the public only. The City will make a determination on the applicable sizing guide formula for an FSE on a case-by-case basis.

(2) All New FSEs as previously defined, with the exception of non-cooking intensive FSEs as determined by the City, are required to install a Grease Interceptor sized in accordance with the *City of West Columbia Grease Trap and Grease Interceptor Sizing Guide (Attachment C)*.

A Grease Trap or Grease Interceptor must be sized in accordance with the formulae set forth in (A), (B), or (C) of the *City of West Columbia Grease Trap and Grease Interceptor Tank Sizing Guide (Attachment C)* unless the City approves sizing calculations signed and sealed by a registered professional engineer in accordance with the Fixture Unit Calculation Method set forth in (D) of the *City of West Columbia Grease Trap and Grease Interceptor Tank Sizing Guide (Attachment C)*. No Grease Interceptor

less than 1,000 gallons total capacity will be approved for installation by the City provided that the City may consider granting exceptions on a case by case basis where it receives engineering calculations sealed by a professional engineer registered in the state of South Carolina and acceptable to the City demonstrating that a smaller size has satisfactory capacity from the FSE Owner to the City. The City retains sole discretion to approve or deny use of a Grease Interceptor less than 1,000 gallons total capacity in all circumstances, even in the event such engineering calculations are provided. In evaluating a request for such approval, the City shall consider all relevant factors, including, without limitations, the risk of failure of such a system to perform as intended, the maintenance and monitoring requirements associated with such a system, and the City's interest in consistency and uniformity in the administration of these requirements.

(3) All New FSEs must submit, for each Grease Trap and Grease Interceptor, cut sheets, plans, and specifications in form and content reasonably acceptable to the City. These documents must be submitted to the City prior to the FSE's installation of the Grease Trap and/or Grease Interceptor. An approval letter for each new Grease Trap or Grease Interceptor must be issued by the City to the FSE prior to construction and/or installation of the Grease Trap and/or Grease Interceptor by the new FSE.

(4) The construction and location criteria for Grease Interceptors must be in accordance with Environmental Protection Agency (EPA) Guidance Document, "On site Wastewater Treatment and Disposal Systems," Chapter 8, as currently issued and as that document may be updated or superseded by similar EPA guidance documents in the future.

(5) No New FSE may initiate operations that potentially discharge FOG into the City's system until proper Grease Traps and/or Grease Interceptors, as appropriate, are installed by the FSE in accordance with this Article and are inspected as installed and approved by the City.

(6) For cases where, in consideration of all relevant design and engineering factors, the City determines in its sole discretion that underground-type Grease Interceptors are appropriate but not feasible to install, new FSEs must install approved Grease Traps in accordance with this Part 2 and Part 1 for use on individual fixtures, including, without limitation, pot sinks, mop sinks, pre-rinse sinks, wok ovens, floor drains and other potentially grease containing drains. In such cases, Grease Traps will be considered acceptable by the City only if approved flow control fittings are placed on the inlet that prevent overloading and a sample port is placed on the outlet of each Grease Trap.

(7) FSEs shall not connect dishwashers, garbage grinders, or domestic sewers to any Grease Trap or Grease Interceptor.

(8) All Grease Traps and Grease Interceptors must be installed by a properly licensed plumbing contractor.

(b) ***Existing FSEs***

(1) All existing FSEs, as previously defined, must have Grease Traps and Grease Interceptors approved by the City in accordance with this Article. In cases where existing FSEs do not already have a Grease Interceptor installed and where the installation of an outdoor Grease Interceptor is feasible in the City's sole discretion, the Grease Interceptor must be installed by the FSE in accordance with this Article and must be approved by the City in writing in advance of installation. The City shall consider exception requests based on all relevant design and engineering factors including, without limitations, the risks of failure of such a system to perform as intended, the maintenance and monitoring requirements associated with such a system, and the City's interest in consistency and uniformity in the administration of these requirements.

(2) Sizing of any Grease Trap or Grease Interceptor must be in accordance with the *City of Columbia Grease Trap and Interceptor Sizing Guide* (*Attachment C*).

(3) Grease Interceptors must be located as close to the source of the wastewater service line at the building as physically possible, while remaining accessible for maintenance.

(4) Existing FSEs shall not connect new dishwashers, garbage grinders, or domestic sewer to any Grease Trap or Grease Interceptor. The City, in its sole discretion, and after due consideration of all relevant design, engineering and cost factors, as well as the public interest in the services provided by the FSE's operations, may grant a variance to this requirement in circumstances in which the City determines that compliance with this requirement would be unduly burdensome or impractical due to physical condition or layout of the FSE.

(5) New flow control devices, Grease Traps, or Grease Interceptors must be pre-approved prior to installation.

(c) ***Grease Traps***

(1) Prior to installation, the design and location of all Grease Traps must be submitted by the FSE to the City for approval with supporting calculations, cut sheets, and/or sizing charts, including a sizing chart similar to requirements set forth in the *City of West Columbia Grease Trap Specification Sheet Example (Attachment D)* and all in form and content reasonably satisfactory to the City and sufficient to show compliance with the requirements of this ordinance. Satisfactory proof of minimum Grease Trap capacity, as specified in the *City of West Columbia Grease Trap and Interceptor Sizing Guide (Attachment C)* must also be provided to the City by the FSE for all Grease Traps prior to installation. A Grease Trap must be sized in accordance with the formulae set forth in (A), (B), or (C) of the *City of West Columbia Grease Trap and Grease Interceptor Sizing Guide (Attachment C)* unless the City approves sizing calculations signed and sealed by a registered professional engineer in accordance with the Fixture Unit Calculation Method set

forth in (D) of the *City of West Columbia Grease Trap and Grease Interceptor Sizing Guide (Attachment C)*.

(d) ***Grease Interceptors***

All FSE's Grease Interceptors must:

(1) Be sized in accordance with the formulae set forth in (A), (B), or (C) of the *City of West Columbia Grease Trap and Grease Interceptor Sizing Guide (Attachment C)* unless the City approves sizing calculations signed and sealed by a registered professional engineer in accordance with the Fixture Unit Calculation Method set forth in (D) of the *City of West Columbia Grease Trap and Grease Interceptor Sizing Guide (Attachment C)*.

(2) Provide precast or cast in place minimum 4000 psi concrete vaults. The City, in its sole discretion, may allow the use of other materials upon written request for approval prior to installation and considering all relevant design, engineering and other factors demonstrating the need and acceptability of the use of alternative construction techniques or materials.

(3) Provide an open top inlet tee that extends to 24" from the bottom of the vault;

(4) Provide a vault with a baffle wall with a minimum 3" air gap for venting at the top and an open top tee extending to 12" from the bottom of the vault;

(5) Provide an outlet tee that extends to 12" from the bottom of the vault;

(6) Provide access manholes to be maintained by the FSE directly above all three tees for inspection and maintenance;

(7) Provide two-way cleanouts to be maintained by the FSEs on the inlet and outlet lines;

(8) Demonstrate an anti-flotation design with proper base course and compacted sub-grade to prevent settling where conditions warrant;

(9) Provide vault top and manhole covers for HS-20 rated loading where applicable; and

(10) As to all Grease Interceptors, provide that they are located where they are easily accessible for inspection, cleaning, and maintenance.

(e) ***Standard Grease Interceptors Details***

(1) FSEs must comply with standard details as illustrated in *Standard Grease Interceptor* (*Attachment A*) and *Standard Grease Interceptor in Series* (*Attachment B*) for standard Grease Interceptor installation.

(2) Grease Interceptors may be installed in series if volume required is more than 1500 gallons. When installed in series, the first tank shall not have a baffle or center tee (see *Standard Grease Interceptor in Series* (*Attachment B*)).

(f) ***Access Manholes***

(1) The minimum access opening dimensions for access manholes shall be a minimum of 24" in diameter.

(2) An access opening shall be provided by the FSE above the inlet, baffle wall, and outlet tees and shall be easily removable by one person.

(3) A minimum 6" diameter traffic rated clean out with a concrete collar extending down through the vault top may be provided by the FSE above the baffle wall tee in lieu of an access manhole.

a. Manhole frames and covers:

b. Shall provide grey iron castings, ASTM A48, Class 2 Iron;

c. All bearing surfaces shall be machined;

d. Acceptable manufacturer: US Foundry Model 680; and

e. Shall provide HS-20 rated frame and cover where applicable.

4-3-79 Inspection for Acceptance.

(a) The FSE must notify the City 48 hours in advance, during the normal work week, when the Grease Interceptor is ready for final inspection by the City, and the City must give final approval prior to the FSE covering any Grease Interceptor.

(b) Where the City denies approval of the Grease Trap and/or Grease Interceptor for a new FSE, the City may elect to submit a request to the appropriate building official requesting that certificates of occupancy be withheld until the Grease Trap and/or Grease Interceptor is constructed in accordance with this specification and is approved by the City.

4-3-80 Attachment A: Standard Grease Interceptor.

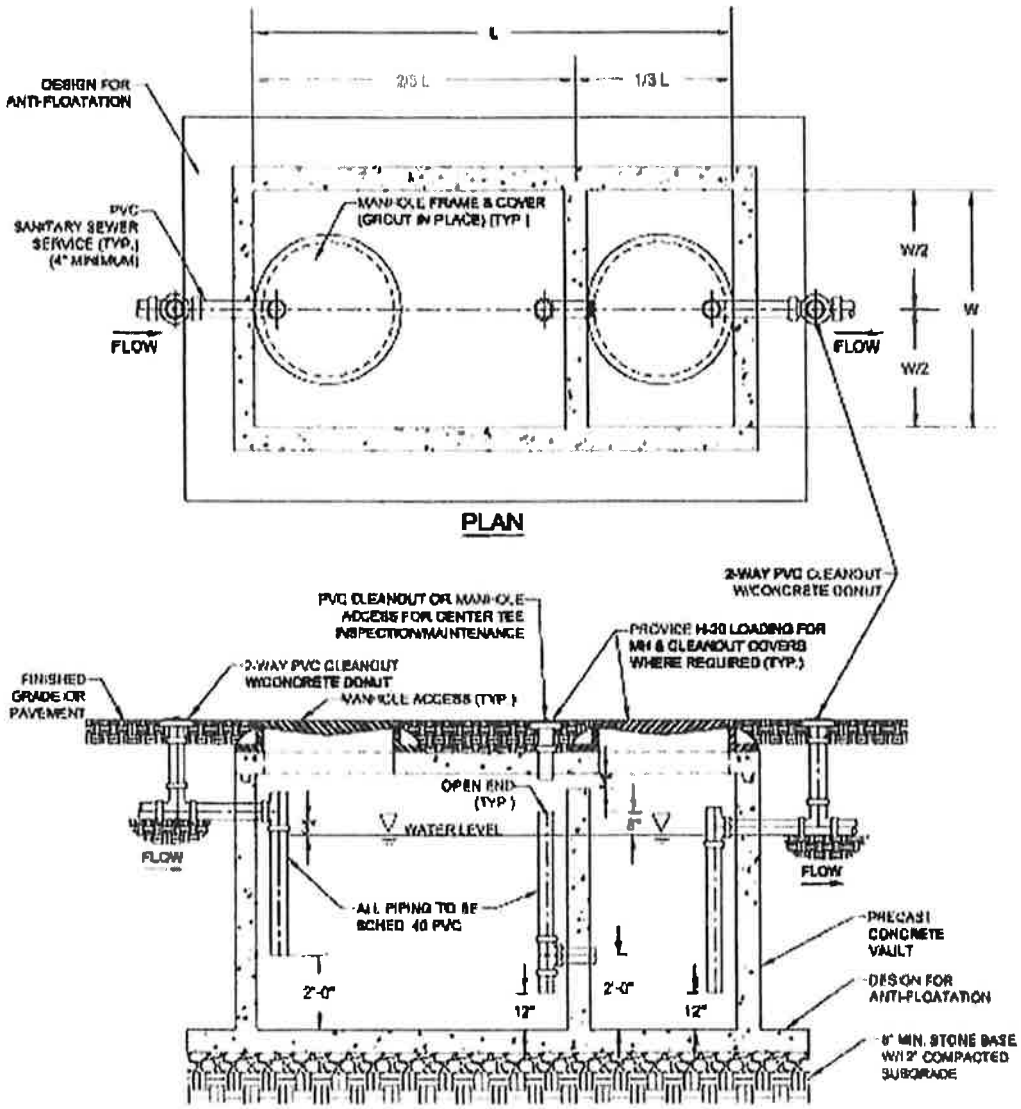

NOTES:

1. ALL PROPOSED GREASE INTERCEPTORS SHALL BE SUBMITTED TO THE CITY OF WEST COLUMBIA FOR APPROVAL PRIOR TO INSTALLATION.
2. ALL GREASE INTERCEPTORS TO BE INSTALLED OWNED AND MAINTAINED BY PROPERTY OWNER.
3. USE NONSHRINK GROUT AT ALL PENETRATIONS.
4. PROVIDE BUTYL RUBBER SEAL BETWEEN ALL SECTIONS AND TOP.
5. LOCATE MANHOLE ACCESS ABOVE TEES FOR VISUAL INSPECTION.

GR #1
CITY OF WEST COLUMBIA
STANDARD GREASE INTERCEPTOR
(NOT TO SCALE)

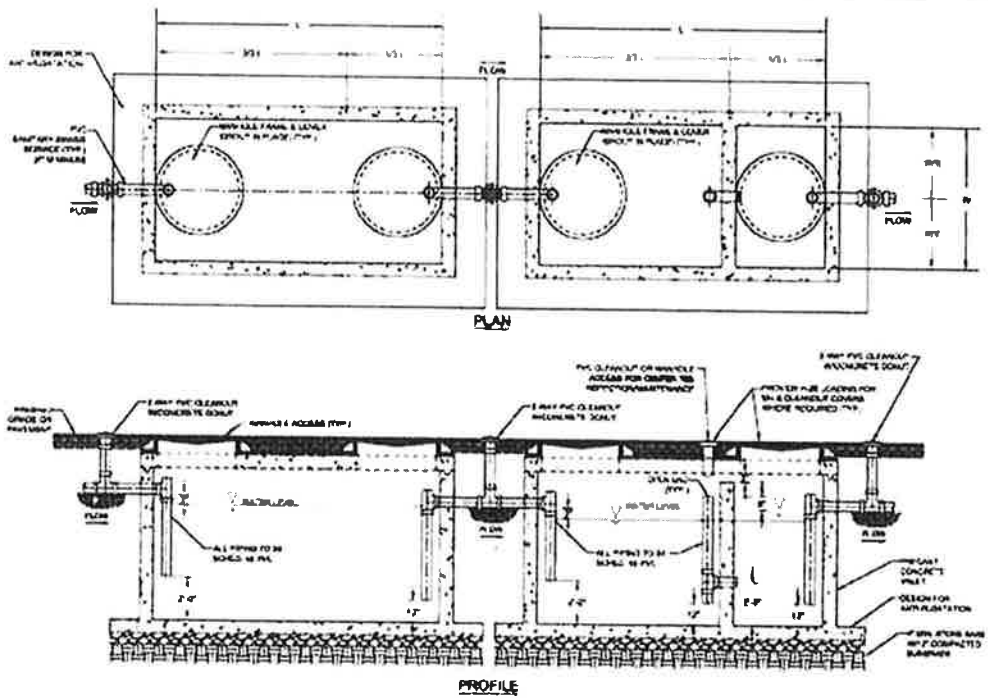

Notes:

1. AL PROPOSED GREASE INTERCEPTORS SHALL BE SUBMITTED TO THE CITY OF WEST COLUMBIA FOR APPROVAL PRIOR TO INSTALLATION.
2. ALL GREASE INTERCEPTORS TO BE INSTALLED OWNED AND MAINTAINED BY PROPERTY OWNER'
3. USE NONSHRINK GROUT AT ALL PENETRATIONS.
4. PROVIDE BUTYL RUBBER SEAL BETWEEN ALL SECTIONS AND TOP.
5. LOCATE MANHOLE ACCESS ABOVE TEES FOR VISUAL INSPECTION.

GR #2

CITY OF WEST COLUMBIA STANDARD GREASE INTERCEPTOR IN SERIES

(NOT TO SCALE)

4-3-82 Attachment C: Grease Trap and Grease Interceptor Sizing Guide.

CITY OF WEST COLUMBIA
GREASE TRAP AND GREASE INTERCEPTOR SIZING GUIDE

A. **NON-COOKING INTENSIVE FOOD SERVICE ESTABLISHMENTS** (examples include ice cream shops, candy shops, deli in grocery or convenience store without cooking facilities, bagel shops, etc.)

Formula: Min. Trap Capacity =[(# of compartments x Length x Width x Depth)/1728] x 7.48 x 0.80

Example 3 compartment sink *[(3 compartments x 17" (L) x 17" (W) x 11" deep) /1728] x 7.48 x 0.80*
33.02 gallon trap capacity (4.4 cu. ft.)

B. **COOKING INTENSIVE FOOD SERVICE ESTABLISHMENTS** (examples include restaurants, drive-in restaurants, deli's with cooking capacity, carry out restaurants, catering, delivery, etc.)

Formula: Min. Interceptor Volume = No. of Seats x FR x (Hours of Operation/18)

FR - Flow Rate
Full Service Restaurant 25 gallons
Non-Washable, Paper, or Plastic Utensils 12.5 gallons

C. **OTHER FOOD SERVICE ESTABLISHMENTS** (examples include hotels, nursing homes, schools, office, or factory cafeteria, etc.)

Formula: Total Volume = # of person meals x 5 gal. x DW
# of person meals = number of meals served during either breakfast, lunch, or supper, whichever is greatest

DW= Dishwashing: With Dishwasher 1.0 or Without Dishwasher .75

Examples *1. A cafeteria with a dishwasher serves 300 meals a day 300 meals x 5 gal. x 1.0 1,500 gal*
2. 200 unit motel w/ efficiency kitchens 200 rooms x 4 people room x 5 gal. meal x 0.75 3,000 gal

D. **FIXTURE UNIT CALCULATION METHOD** (When using the fixture unit calculation method, the Owner must submit calculations signed and sealed by a registered professional engineer in the state of South Carolina to the City for review.)

Formula: Total Volume = Q x T x SF

Q - Flow in GPM - Flow derived from total Drainage Fixture Units (DFU) or Fixture Units (FU) connected to the interceptor as determined using the International Plumbing Code (2000 or higher edition) or AWWA Manual of Water Supply Practices M22

T - Retention Time - 30 Minutes

SF - Storage Factor - 1.25 based on fully loaded interceptor with 25% grease solids.

NOTES:

1. Non-Cooking Intensive Food Service Establishments as determined by the City may utilize grease traps (must have provisions for sampling at outlet of trap). All others must utilize grease interceptors unless approved by City staff. Refer to *Specifications for Grease Traps and Interceptors* - *Part 30* of the City of Columbia Standard Specifications for requirements.
2. Regardless of minimum size required, underground grease interceptors are required to have a minimum 1,000 gallon capacity. When greater than 1,500 gallon capacity is required, multiple units may be furnished and installed in series, see standard details in "Specifications for Grease Traps and Interceptors - Part 30 of the City of Columbia Standard Specifications. Larger sized interceptors may be approved on a case by case basis.
3. Refer to *Fats, Oils, and Grease Management Regulation* - *Part 29* for additional information.
4. The foregoing is a recommended minimum guideline only. It does not in any way relieve the owner of ordinance mandated requirements that discharged waste have a maximum grease content of 100 mg/l, see Sewer Use Ordinance Sec. 23-102.
5. Contact Scott Rogers at 545-3290 for more information.

Revised 07.02.13

4-3-83 Attachment D: Grease Trap Specification Sheet Example.

CITY OF WEST COLUMBIA
GREASE TRAP
SPECIFICATION SHEET EXAMPLE

****NON-COOKING INTENSIVE FOOD ESTABLISHMENTS ONLY****

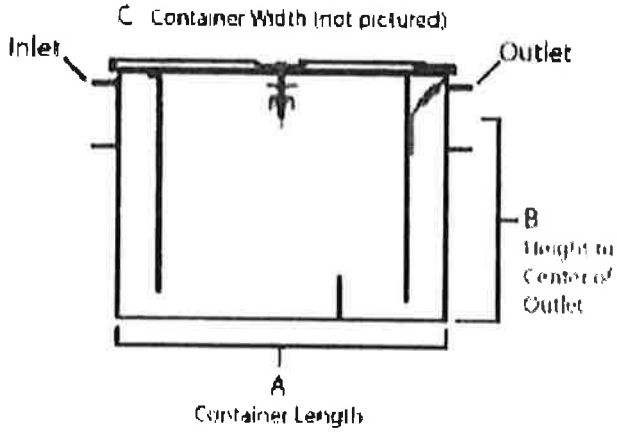

(NOT TO SCALE)

Total Gallon Capacity	Dimension In Inches		
	Length (A)	Height (B)	Width (C)
9.2	19"	8"	14"
19.4	24"	11"	17"
49.8	30"	16"	24"
74.2	34"	18"	28"
98.7	38"	20"	30"

Formula for Calculating Total Grease Trap Capacity:
[Length(A) x Height(B) x Width(C) /1728] x 7.48 = Total Gallon Capacity

NOTES

1. ALL PROPOSED GREASE TRAP PLANS TO BE SUBMITTED & APPROVED BY CITY OF COLUMBIA DEPARTMENT OF UTILITIES AND ENGINEERING PRIOR TO INSTALLATION
2. GREASE TRAP INSTALLED, OWNED AND MAINTAINED BY PROPERTY OWNER